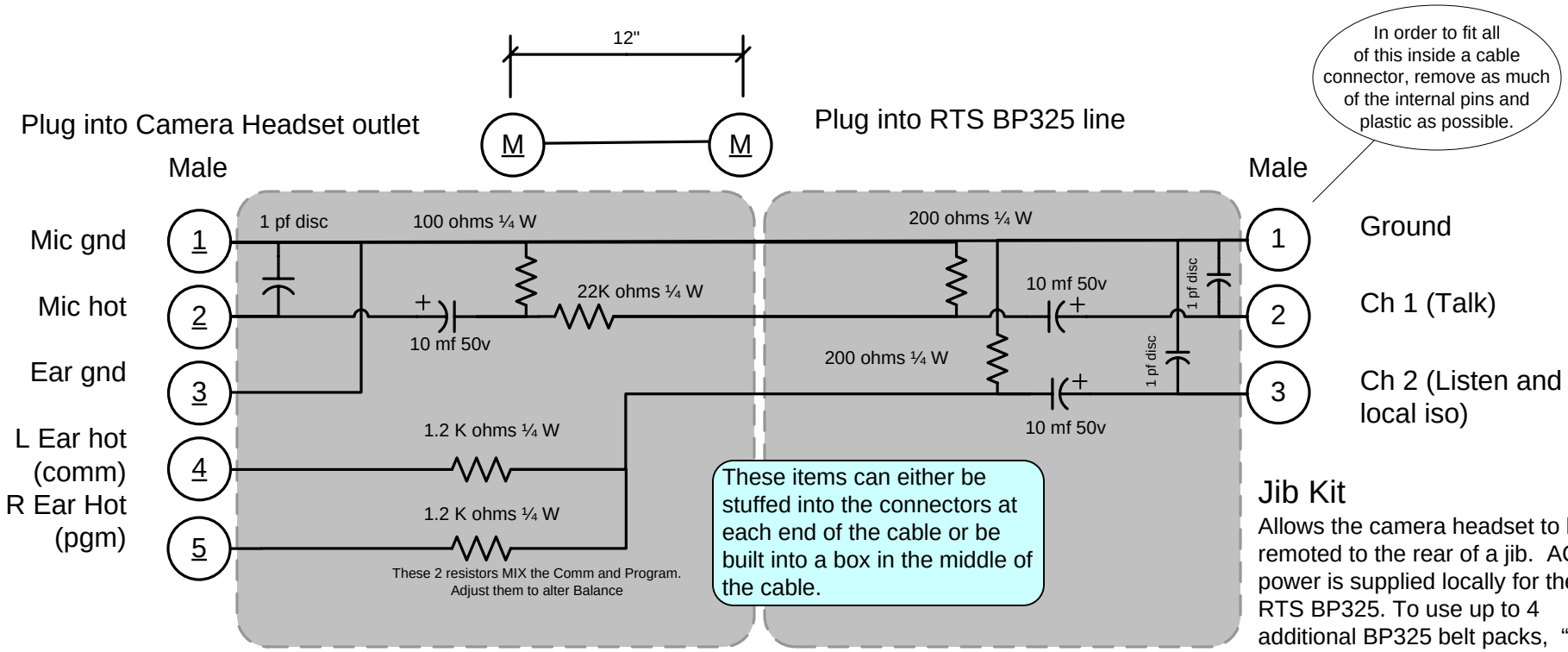

Jib Kit

Allows the camera headset to be remoted to the rear of a jib. AC power is supplied locally for the RTS BP325. To use up to 4 additional BP325 belt packs, "Y" power AND intercom.

Channel 2 is for Local communication and has the listen from the jib camera.

Channel 1 is talk to the director.

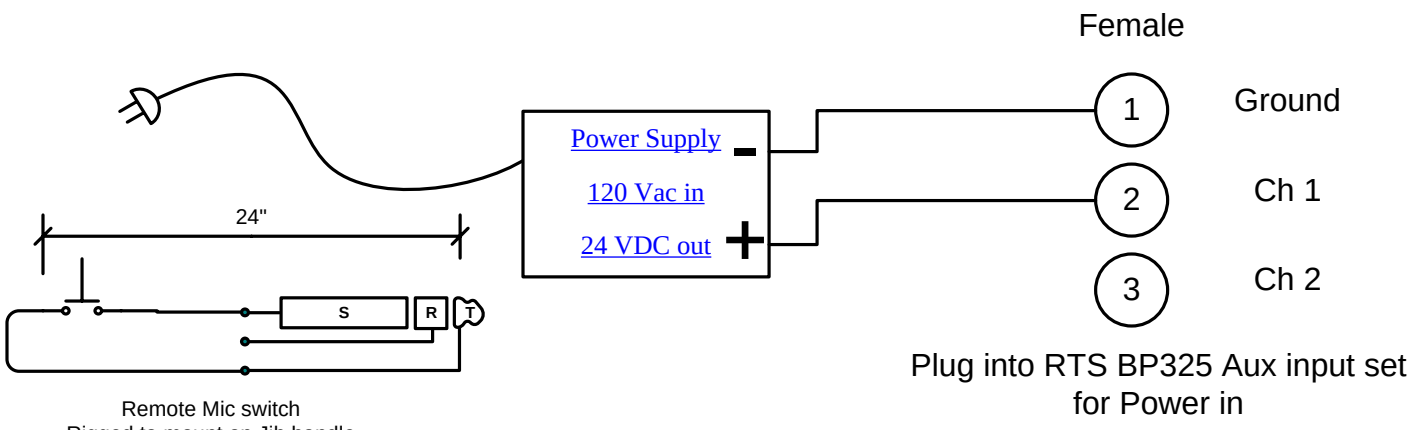

Set switches in BP325

DIPS - all off except
1 ON Call Signal Transmit Disable
5 ON Momentary Only Talk Button, CH1

Jumpers (W1-W5)
W1 OFF CH1 Intercom Audio Listen
W2 ON CH2 Intercom Audio Listen On
W5 MONO Stereo/Mono operation

Power
Unplug the LINE LOOP connector from J6 and plug
it into J4.

Revisions		

best audio
320 Seventh Avenue, #264
Brooklyn, NY 11215
917-750-1134

Intercom Adapters

Designer: Pete Erskine	SCALE None	Drawn by: Pete Erskine	Drawing Number 1
	DATE: Apr 14, 2005		

C:\Documents and Settings\Pete\My Documents__Hardware\Intercom\intercom adapters by JPE.vsd